Photochemistry(II)

For

B.Sc Chemistry(Part-III)

Physical Chemistry

Paper-VA

Lecture-05

Estd.- 1962

By

Dr. Supriya [redacted]

J.L.N College,Dehri-on-Sone[redacted]

V.K.S.U,Ara

supriyachemu@gmail.com

Jablonski Diagram for various photophysical processes

Allowed singlet states:

Forbidden triplet states

due to spin conversion

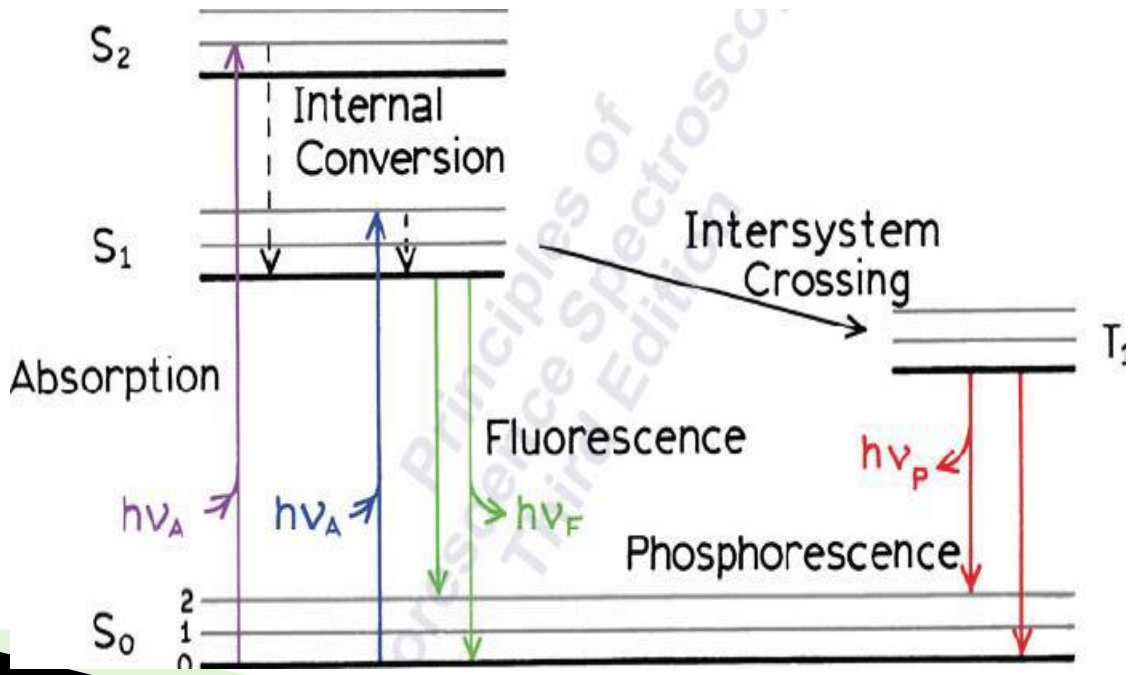

Reference:www.Google.com

Jablonski Diagram

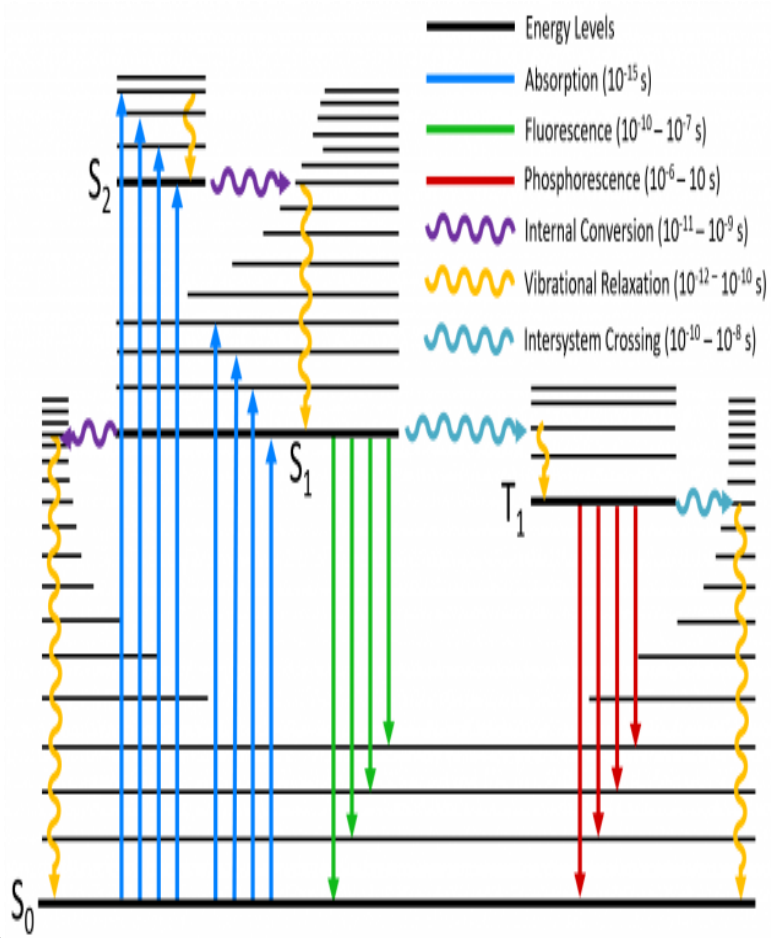

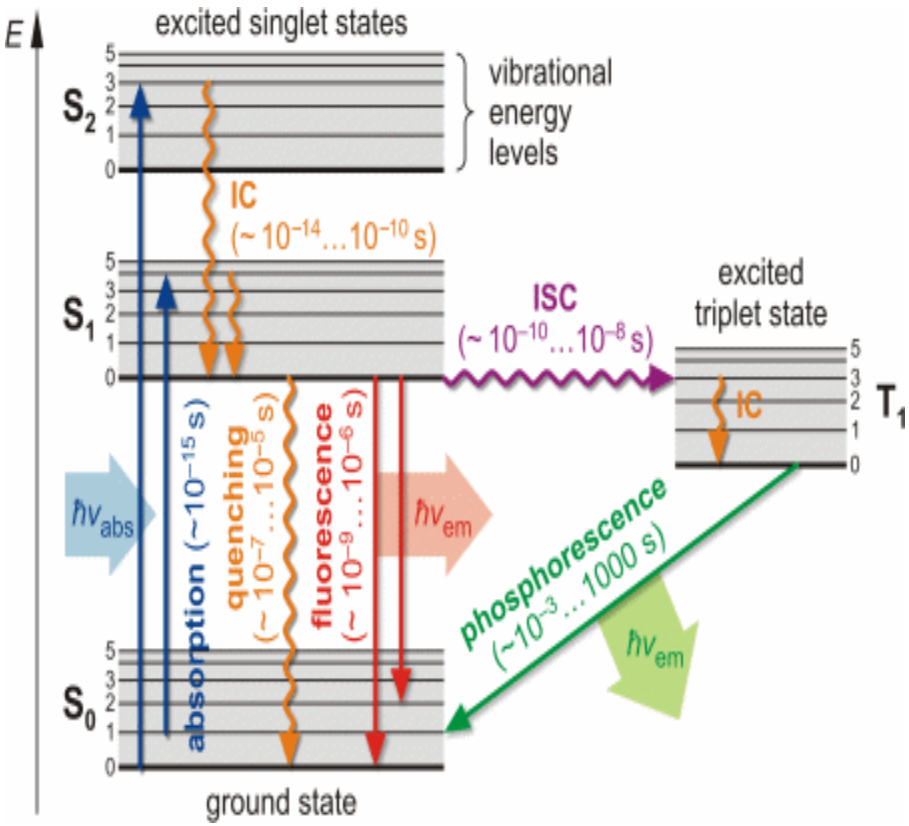

Jablonski Diagram

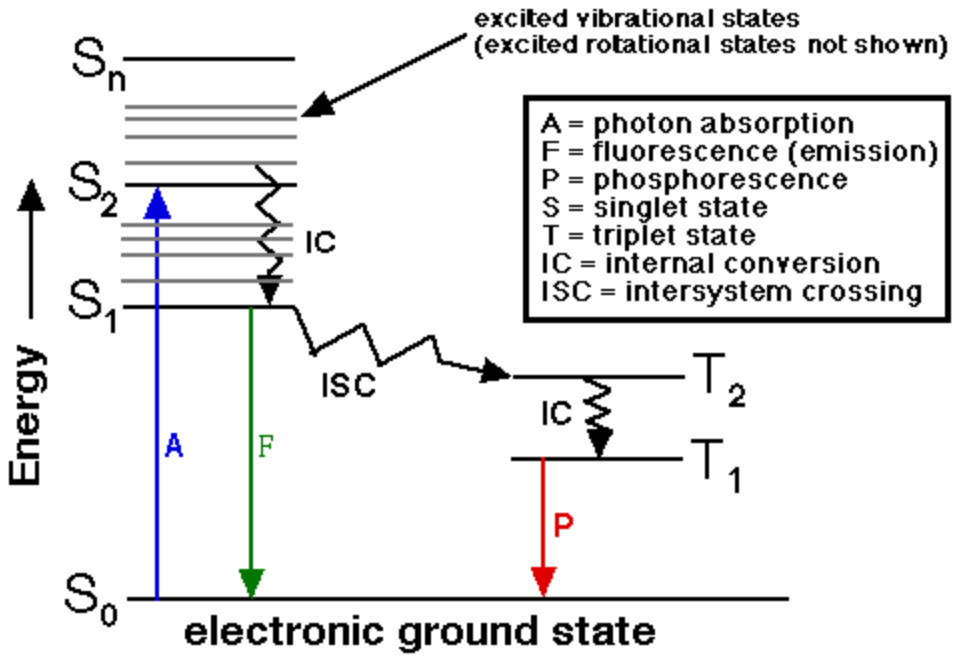

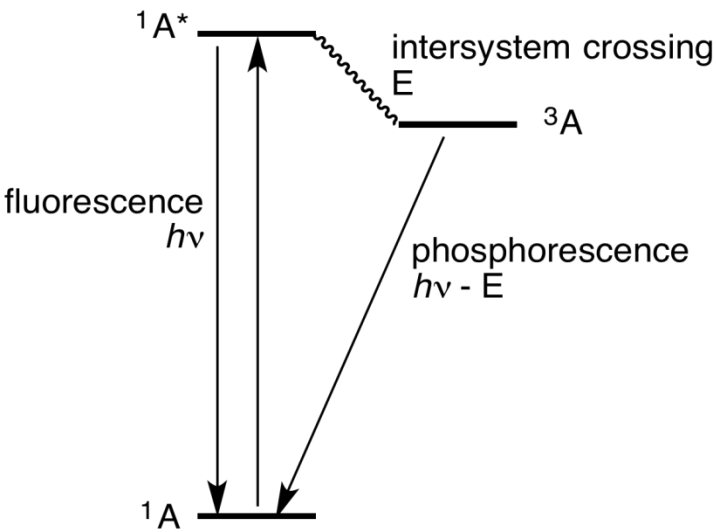

Fluorescence and phosphorescence in terms of excitation of electrons

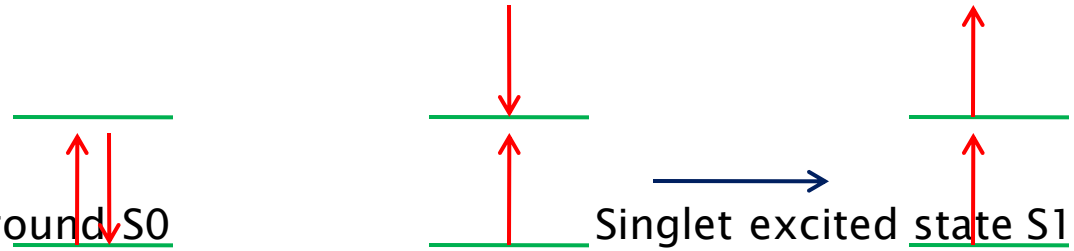

- Singlet ground S0 Singlet excited state S1 Triplet excited state T1

(pair of electrons with in different orbitals)

(pair of electrons with

Opposite spins but each

parallel spins in different Orbital's)

The excited species can return to the ground state by losing all of its excess energy by any one of the paths shown in Jablonski diagram.

Explanation of Jablonski Diagram

First step: is the transition from higher excited singlet states (S2, S3, …) to the lowest excited singlet state S1.This is called internal conversion (IC).

It is a non-radiative process and occurs in less than 10-11 second.

Now from S1 the molecule returns to ground state by any of the following paths.

- Path I : The molecule may lose rest of the energy also in the form of heat so that the complete path is non-radiative or radiation less transitions.
- Path II: Molecule releases energy in the form of light or uv radiation. This is called Fluorescence

Path

- Path III : Some energy may be lost in transfer from S1 to T1 in the form of heat. It is called intersystem crossing (ISC).
- This process involves transition between states of different spins (parallel to antiparallel), ie, different multiplicity.
- This path is non-radiative.
- Path IV : After ISC, the molecule may lose energy in the form of light in going from the excited triplet state to the ground state. This is called phosphorescence.

Chemical reaction

- The activated molecule loses energy by undergoing chemical reaction.
- Since the molecules in singlet excited sates returns quickly to the G.S, it gets no chance to react chemically.
- However the molecules in the triplet state returns to the G.S. slowly, has a opportunity to the activated molecule undergoes chemical reaction.
- i.e., the molecule which undergoes chemical reaction is one which is previously present in a triplet state.

Luminescence & Types

The glow produced in the body by methods other than action of heat i.e. the production of cold light is called Luminescence.

It is of three types

1. **Chemiluminescence:**

The emission of light in chemical reaction at ordinary temperature is called Chemiluminescence

e.g. The light emitted by glow-worms

Fluorescence

2. **Fluorescence:** Certain substances when exposed to light or certain other radiations absorb the energy and then immediately start re-emitting the energy.

Such substances are called fluorescent substances and the phenomenon is called fluorescence .

e.g **Organic dyes such as eosin,fluorescein etc.**

vapour of sodium,mercury,iodine etc.

Phosphorescence

3. **Phosphorescence:** There are certain substances which continue to glow for some time even after the external light is cut off.

If a system absorbs radiant energy and then emits partially or completely after a time lag in the form of radiation

It continues for some time even after the source of exciting radiation is removed.

It mainly exhibited by solids.

It is caused by T1 → T0 transitions which is a quantum mechanically forbidden transition

Thus, phosphorescence is a slow fluorescence.

Distinction between Fluorescence and Phosphorescence

Fluorescence

- If a system absorbs radiant energy and then emits it partially or completely almost instantaneously(within 10-8 S) in the form of radiation.
- Its emission ceases as soon as the source of exciting radiation is removed.
- It can be stimulated in gases, liquids and solids.
- It is caused by S1 → S0 transitions which is a quantum mechanically allowed transition

Phosphorescence

- If a system absorbs radiant energy and then emits partially or completely after a time lag in the form of radiation.
- It continues for some time even after the source of exciting radiation is removed.
- It mainly exhibited by solids.
- It is caused by T1 → T0 transitions which is a quantum mechanically forbidden transition